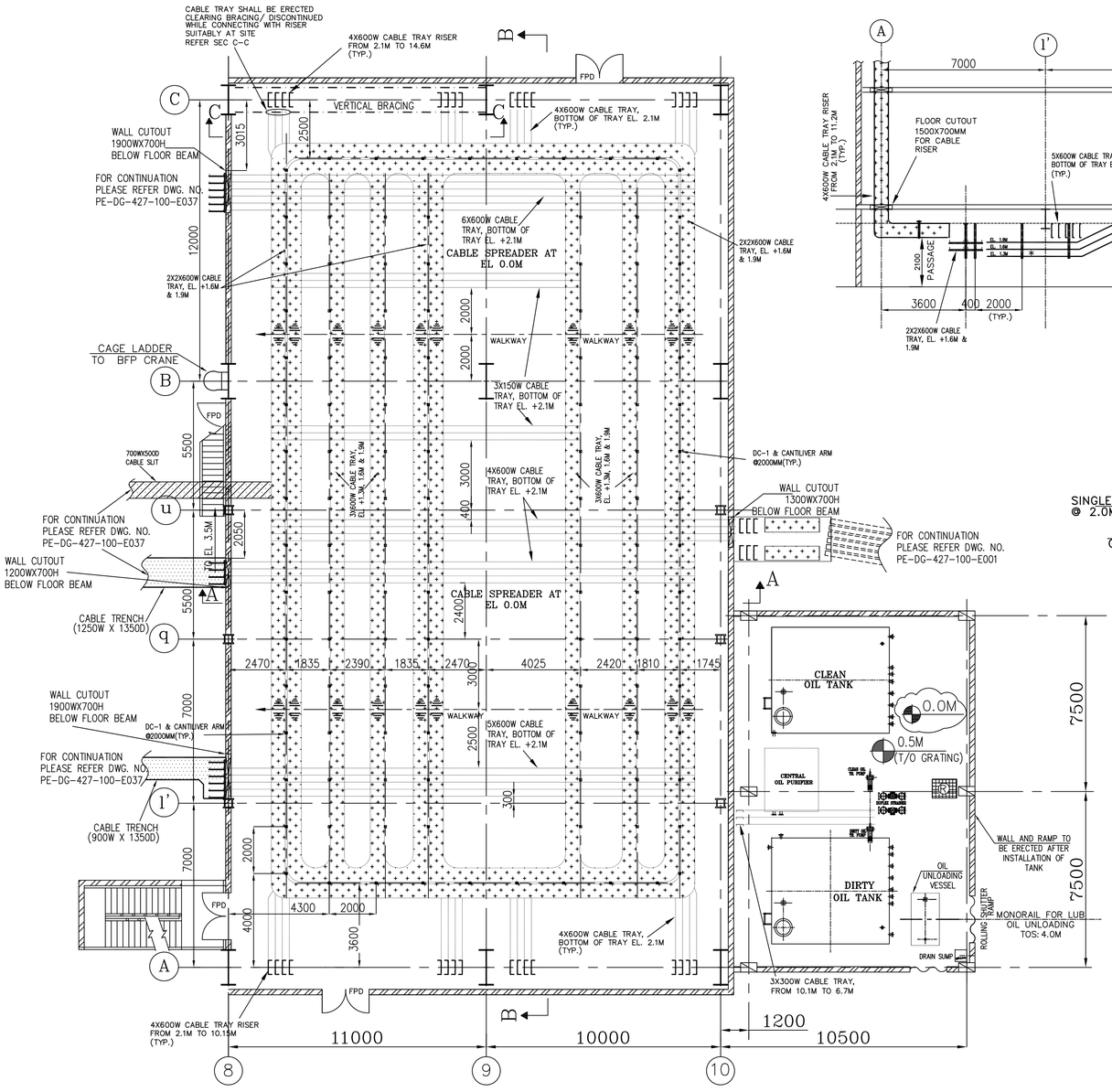

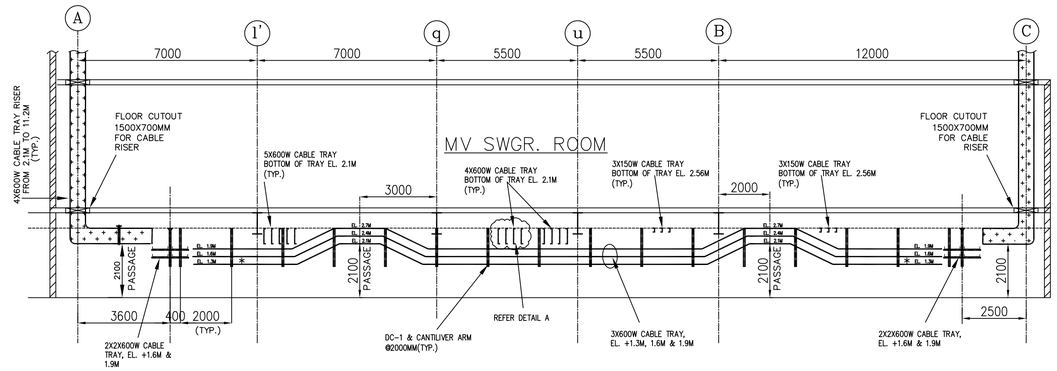

SECTION B-B

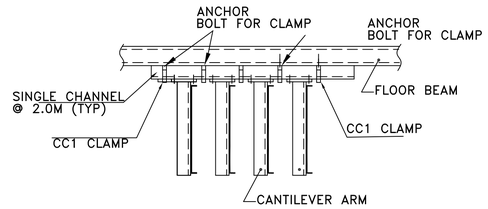

DETAIL A

(TYPICAL FIXING DETAILS FOR FIXING OF CROSS TRAYS)

LEGEND :

- BRICK WALL
- FPD — FIRE PROOF DOOR
- OPERATING FRONT OF THE PANEL
- CABLE TRAY (HORIZONTAL) — OR
- CABLE TRAY (VERTICAL)
- CHANGE IN ELEVATION OF TRAY
- CABLE TRENCH
- CABLE SLIT

REF.DRG.

1. PLOT PLAN	PE-DG-427-100-M001	PEM/MPL
2. EQUIPMENT LAYOUT PLAN AT 0.0M	PE-DG-427-100-M003	PEM/ MPL
3. CROSS SECTION OF MAIN PLANT	PE-DG-427-100-M006	PEM/ MPL
4. TRANSFORMER YARD LAYOUT	PE-DG-427-100-E001	PEM/ ELECT
5. CABLE ERECTION PHILOSOPHY	PE-DG-427-507-E004	PEM/ ELECT
6. TYPICAL DETAILS OF CABLE TRAY & ACCESSORIES	PE-DG-427-507-E005	PEM/ ELECT
7. INSTALLATION DETAILS FOR CABLE TRAY SUPPORT SYSTEM.	PE-DG-427-507-E006	PEM/ ELECT
8. MV SWITCHGEAR ROOM LAYOUT	PE-DG-427-100-E002	PEM/ ELECT
9. CABLE TRAY LAYOUT IN TG HALL FROM 0.0M TO 9.0M	PE-DG-427-100-E037	PEM/ ELECT

NOTES :

1. ALL DIMENSIONS ARE IN MM. AND ELEVATIONS IN METRES.
2. ALL ELEVATIONS MARKED ARE W.R.T. TG HALL FINISHED FLOOR LEVEL AS 0.0M WHICH CORRESPONDS TO EL 219.0M.
3. ALL CABLE TRAYS USED SHALL BE OF 600MM WIDE, UNLESS NOTED OTHERWISE.
4. STANDARD CABLE TRAYS AND ACCESSORIES SHALL BE USED.
5. CABLE TRAYS WILL BE ADJUSTED SUITABLY AT SITE AT THE POINTS WHERE THEY ENCOUNTER HORIZONTAL FLOOR BRACINGS IN THE CROSS WAY GALLERY AND CABLES SHALL BE PASSED THROUGH OVER THE BRACINGS. ALTERNATIVELY, TRAYS SHALL CLEAR HORIZONTAL BRACINGS.
6. CABLE TRAYS & SUPPORTS INSTALLATION SHALL BE DONE AS PER REF. DRG. NO. 7.
7. BOTTOM MOST TRAY MARKED AS '*' OF HORIZONTAL RUNS SHALL BE PERFORATED TYPE.
8. LOCAL CONNECTING TRAY OF OF 100/150MM WIDE (PERFORATED TYPE) SHALL BE PROVIDED FROM MAIN RUNS UPTO CUTOUTS FOR EJB/LP CABLING AS PER REQUIREMNT AT SITE.

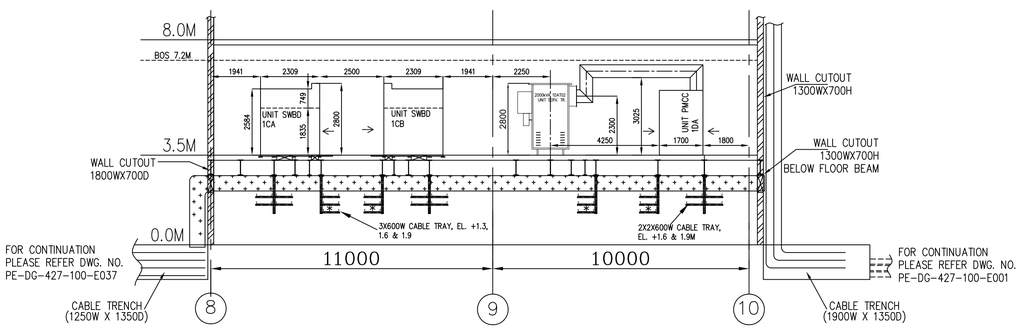

SECTION A-A

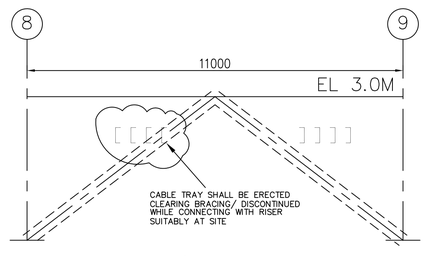

SECTION C-C

REV	DATE	ALTD	CHD	APPD	REV	DATE	ALTD	CHD	APPD

CUSTOMER: NTPC-SAIL POWER COMPANY (P) LIMITED

CUSTOMER'S CONSULTANT: MECON LIMITED

JOB No. 427

STATUS CONTRACT

DISTRIBUTION

ROURKELA PP-II EXPANSION PROJECT (1X250 MW)

BHARAT HEAVY ELECTRICALS LTD POWER SECTOR PROJECT ENGINEERING MANAGEMENT NOIDA

DEPT CODE		NAME	SIGN	DATE
E	DRN	SuM/AmA		07.01.17
	DESN	SuM/AmA		
	CHD	SBR		
	APPD	SL		

TITLE: CABLING LAYOUT BELOW MV SWITCHGEAR ROOM

MPL	C	MSE	I	MAX	E	DEPT.	SCALE 1:150	DRAWING No. PE-DG-427-100-E009
						SIGN		
						DATE		SHEET 01 OF 01 REV 0

SIZE-A1

COPY RIGHT AND CONFIDENTIAL
© 2016 BHARAT HEAVY ELECTRICALS LIMITED
The information on this document is the property of BHARAT HEAVY ELECTRICALS LIMITED
It must not be used directly or indirectly in any way detrimental to the interest of the company.

COMPUTER FILE NAME: